CHARGO
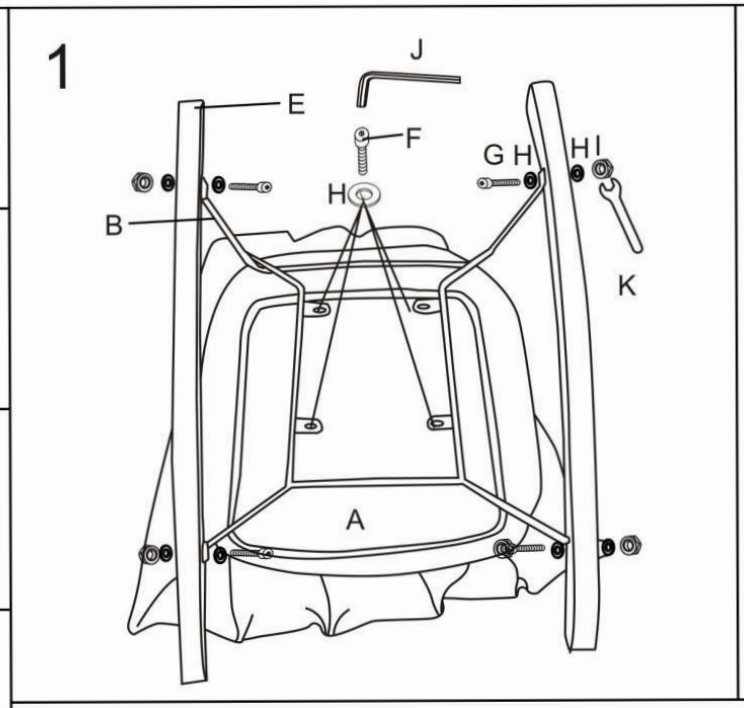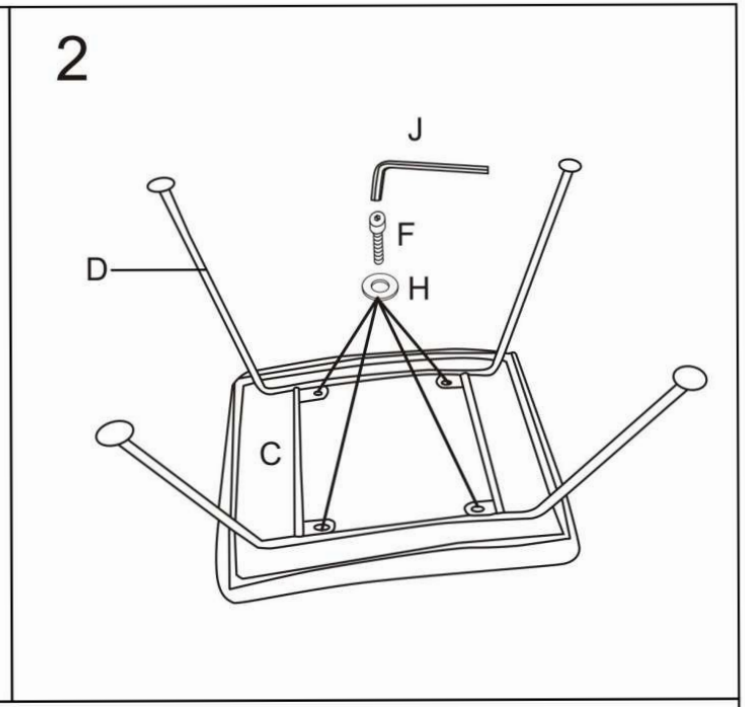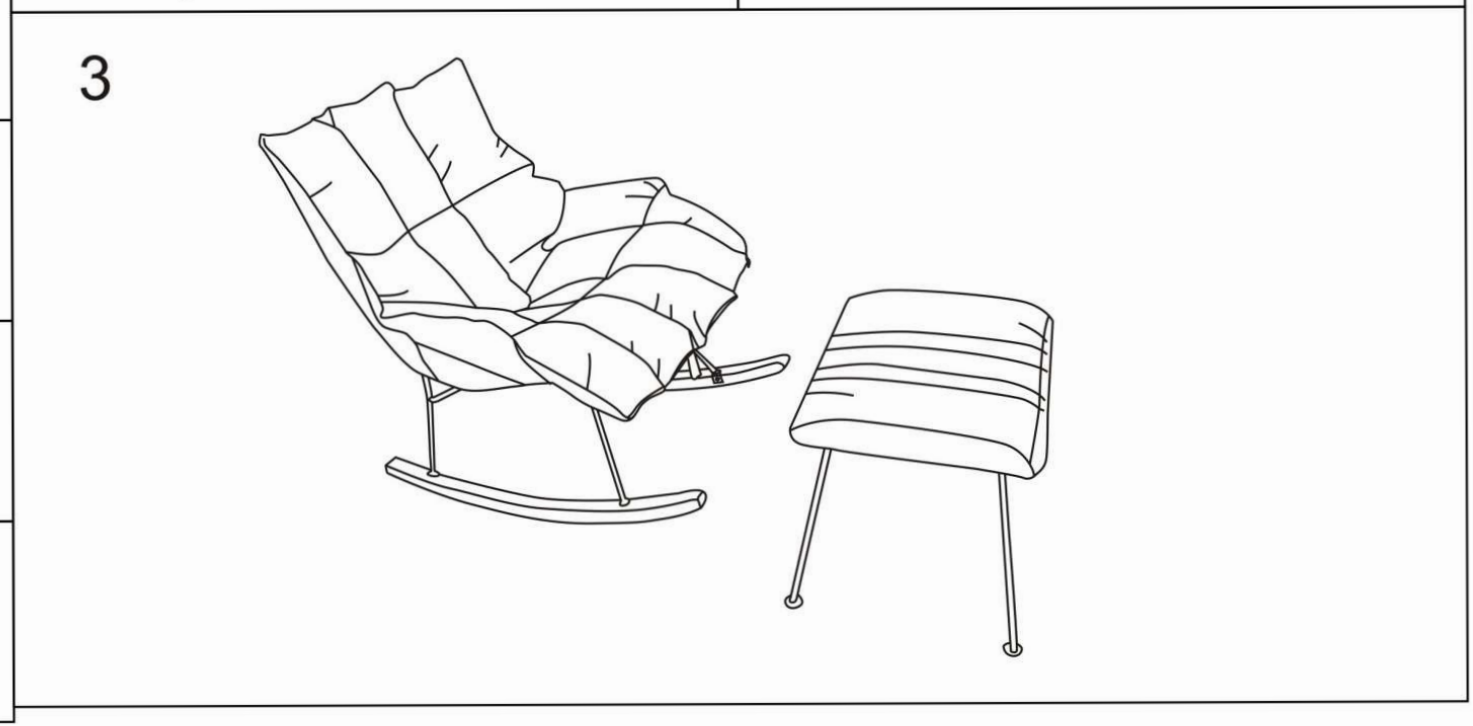
Ax1	Hx16
Bx1	Ix4
Cx1	Jx1
Dx1	Kx1
Ex1	
6x18mm Fx8	
6x35mm Gx4